Single phase Controlled Rectifiers

INTRODUCTION

- *Diodes of rectifier circuits in chp5 are replaced by thyristors.*

- *In thyristor based rectifiers, output voltage can be controlled. So they are termed as controlled rectifiers.*

- *Controlled rectifiers produce variable DC output, whose magnitude is varied by Phase control.*

  Phase Control

  DC output from rectifier is controlled by controlling duration of the conduction period by varying the point at which gate signal is applied to SCR.

- *Main drawback of phase control is Radio Frequency Interference (RFI)*

- Controlled rectifiers are of two types,

1- **Fully Controlled rectifiers**

DC current is unidirectional, but DC voltage has either polarity. With one polarity, flow of power is from AC source to DC load---Rectification.

With the reversal of DC voltage by the load, flow of power is from DC load to AC source---Inversion.

2- **Half controlled rectifiers**

Half of SCRs are replaced by diodes.

DC output current and voltage are unidirectional. i.e., flow of power is from AC source to DC load.

Half-Wave Controlled Rectifiers

With Resistive Load

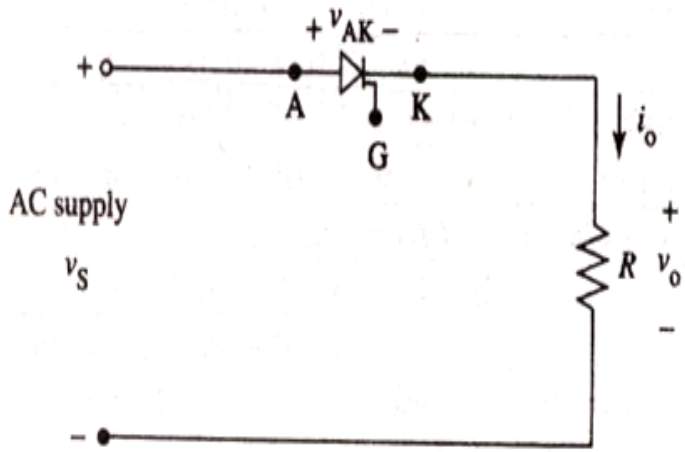

(a)

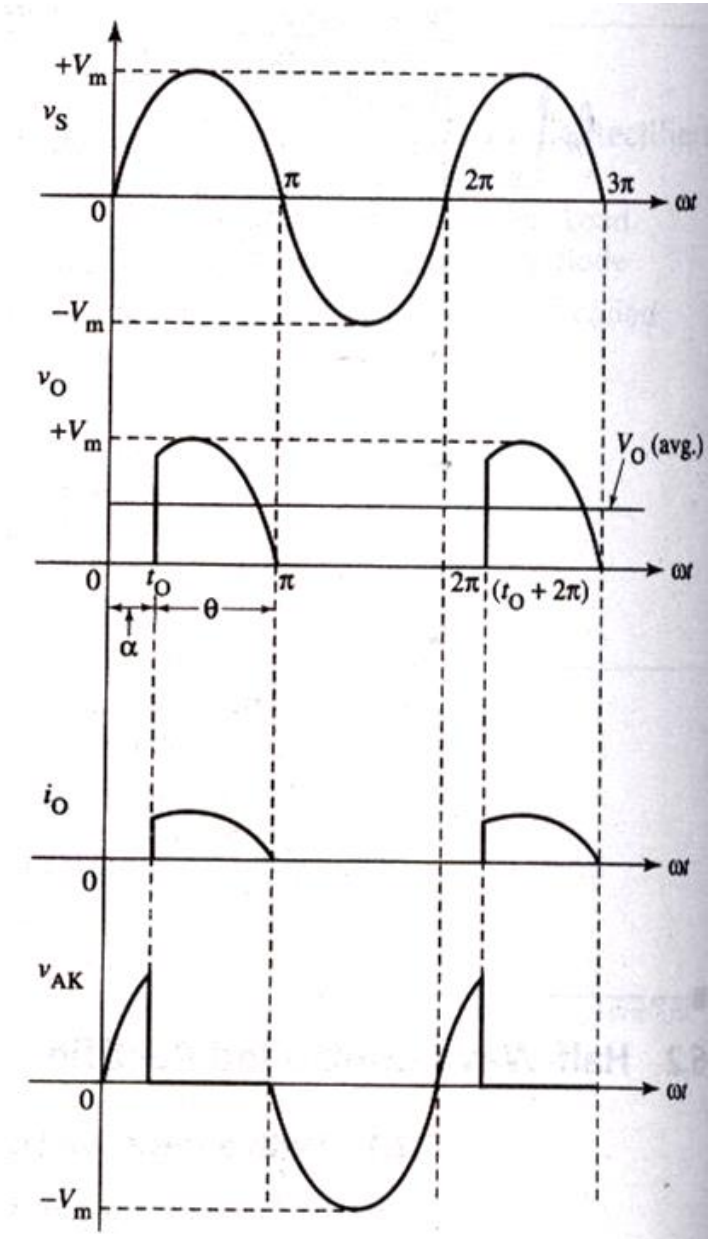

(b)

With an Inductive (RL) Load

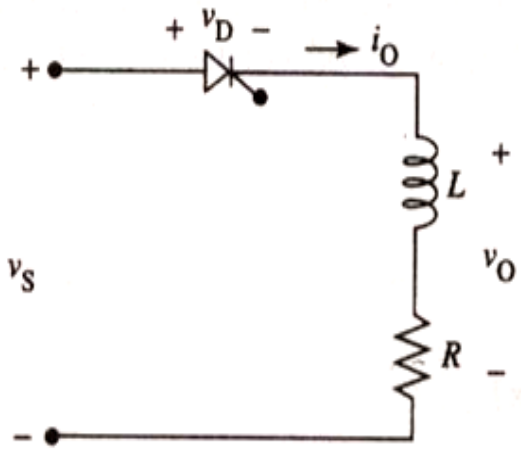

(a)

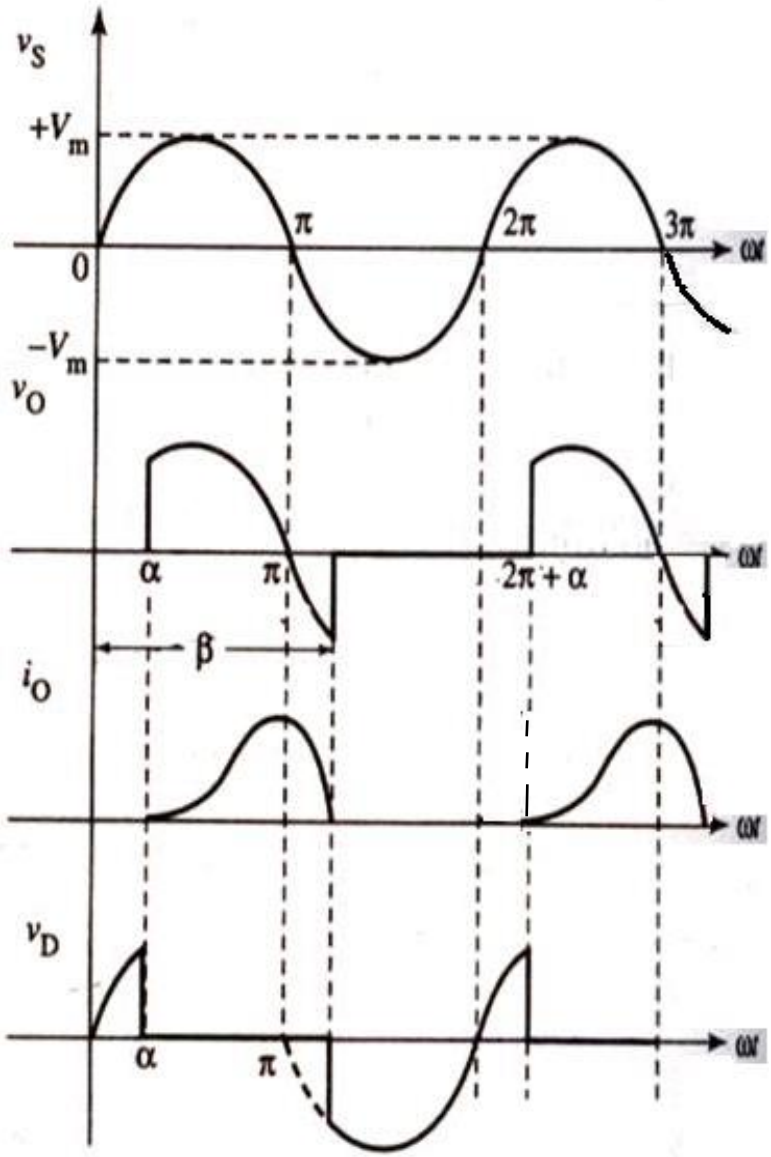

(b)

With Inductive Load and Freewheeling Diode

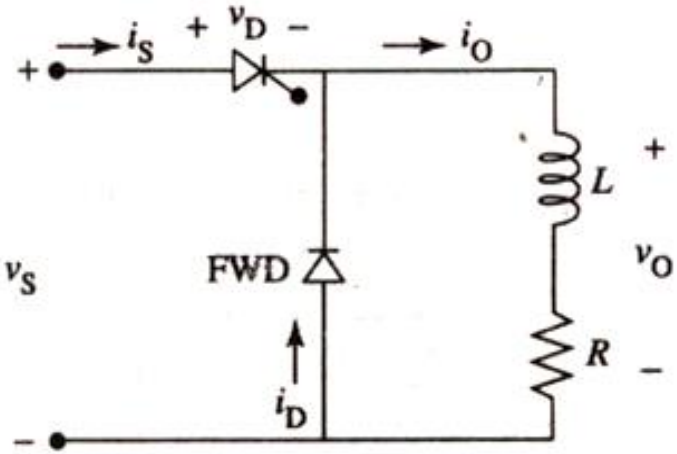

(a)

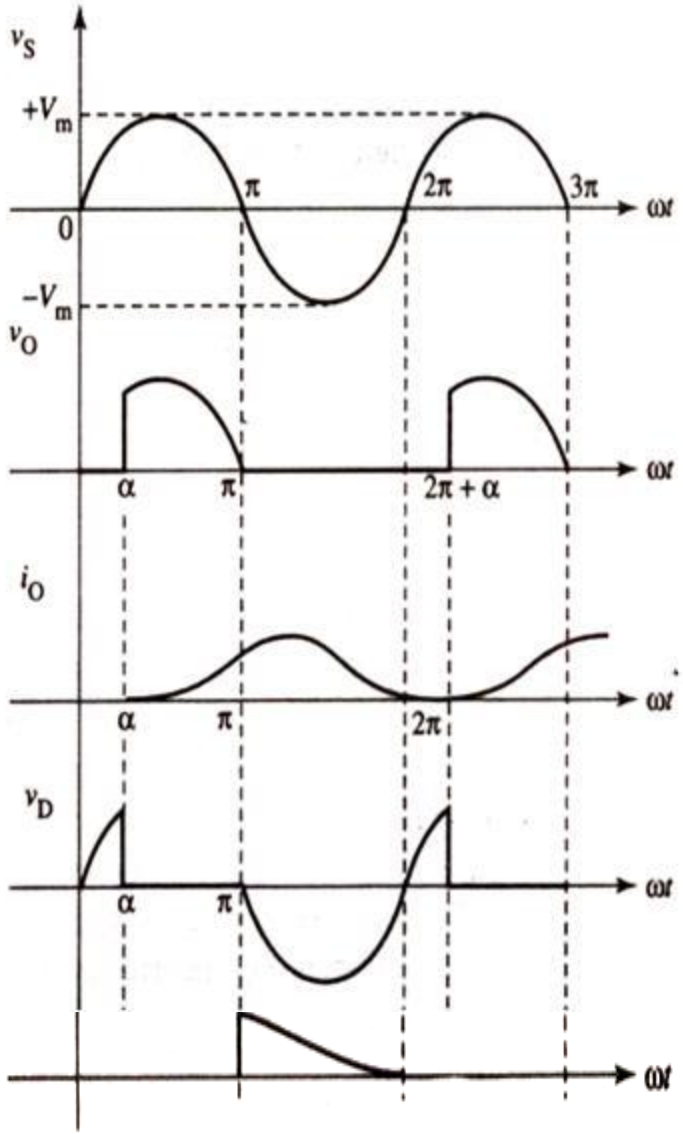

(b)

Full-Wave Controlled Center-Tap Rectifiers

With Resistive Load

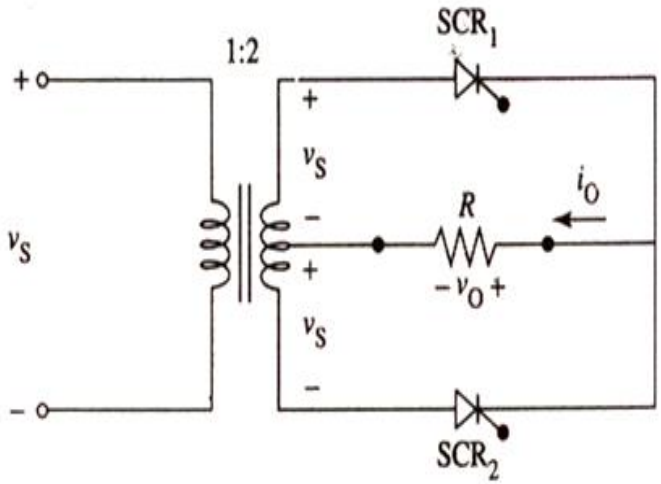

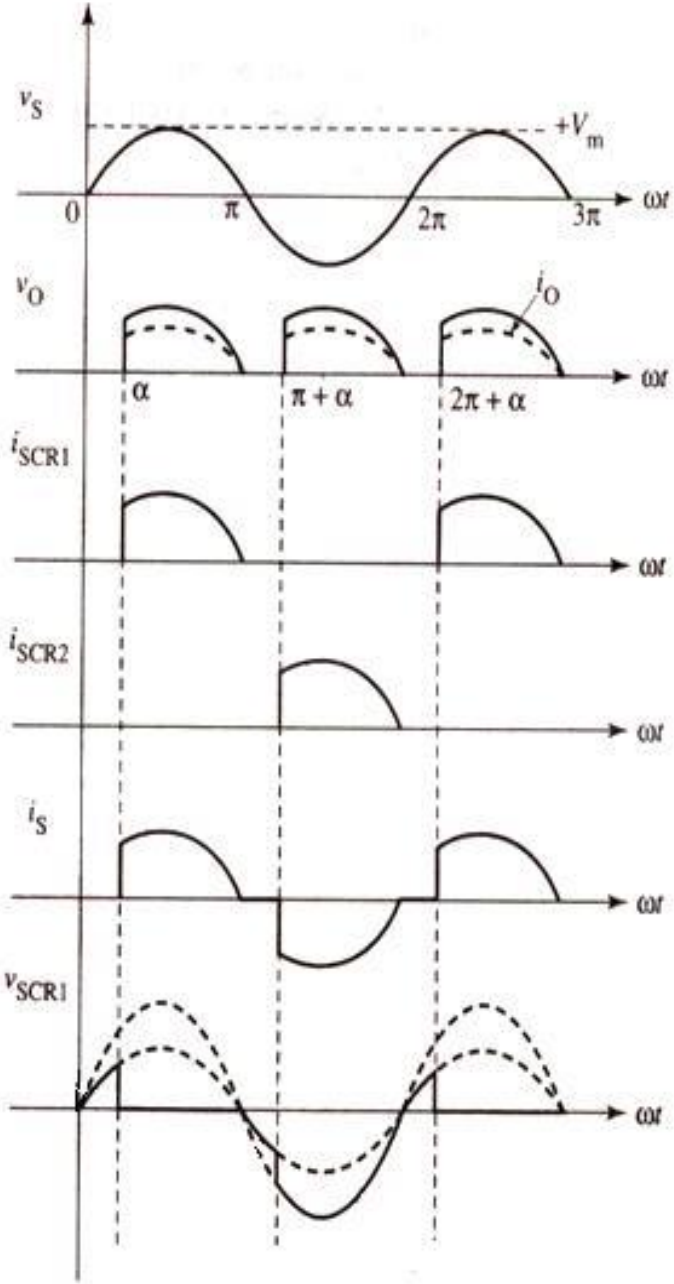

With an Inductive (RL) Load

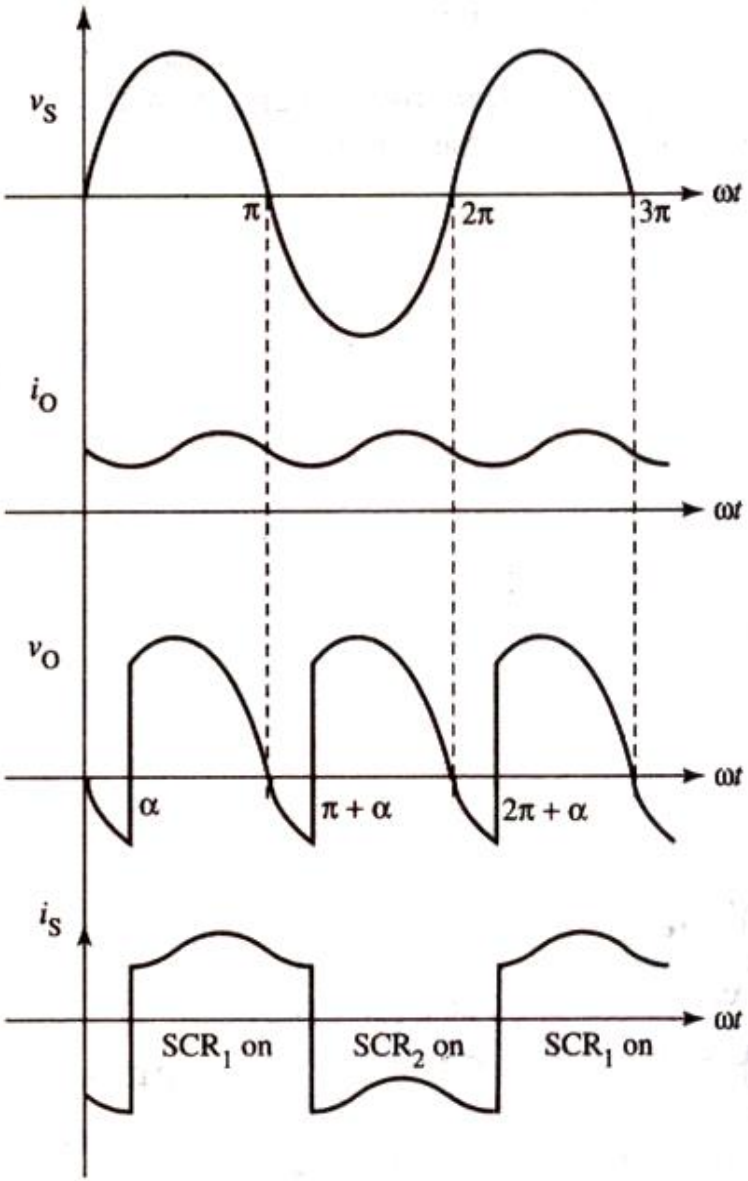

With Freewheeling Diode

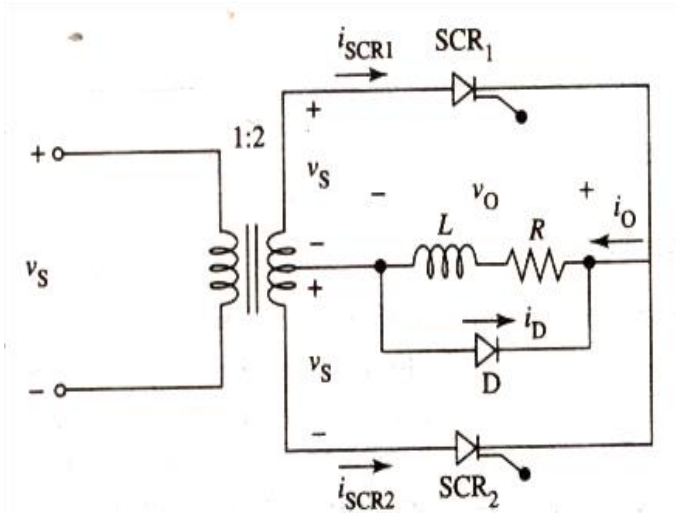

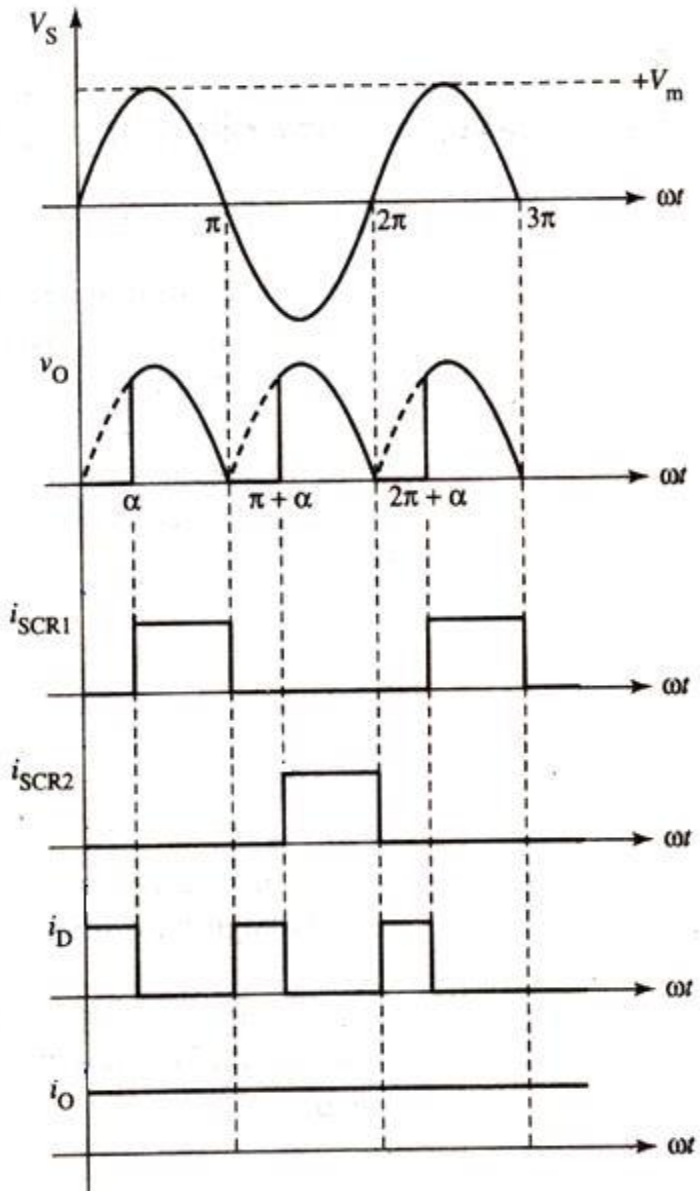

EXAMPLE 6.4

Explain with the help of waveforms the operation of a full-wave center-tap rectifier with RL load for the following firing angles:

(a) 0°

(b) 45°

(c) 90°

(d) 135°

(e) 180°

Assume ***highly Inductive*** Load

Voltage and current waveforms for α=0°

- **During positive-half cycle of source voltage, SCR1 is forward biased and SCR2 is reverse biased. During negative half-cycle, SCR2 is forward biased and SCR1 is reverse biased. In either case voltage across the load is Vs.**

- **Output is similar to uncontrolled rectifier.**

- **Each SCR conducts for 180° and supplies current to the load for this period**

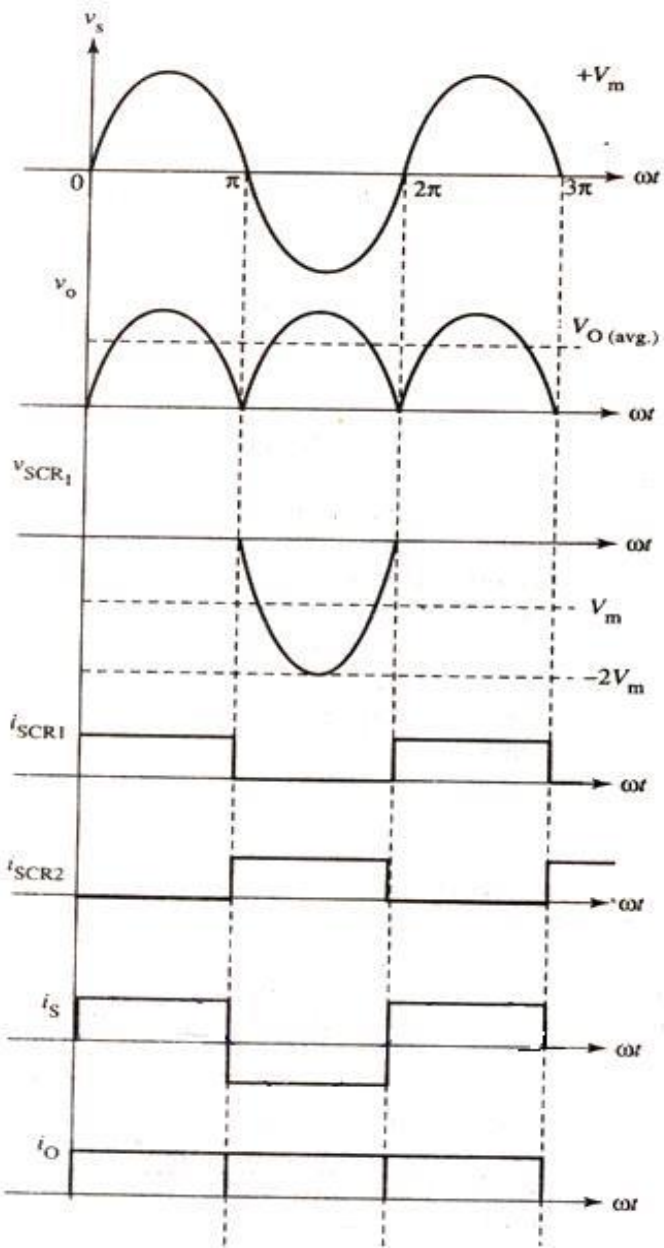

Voltage and current waveforms for α=45°

- **Average DC output voltage decreases.**
- **If SCR1 is triggered at 45°, SCR2 will conduct upto that point, even though the source voltage is zero, due to highly inductive nature of load.**
- **When SCR1 is turned on, SCR2 is turned off.**
- **Current to the load is supplied by SCR1 and SCR2, each conducting for 180°**

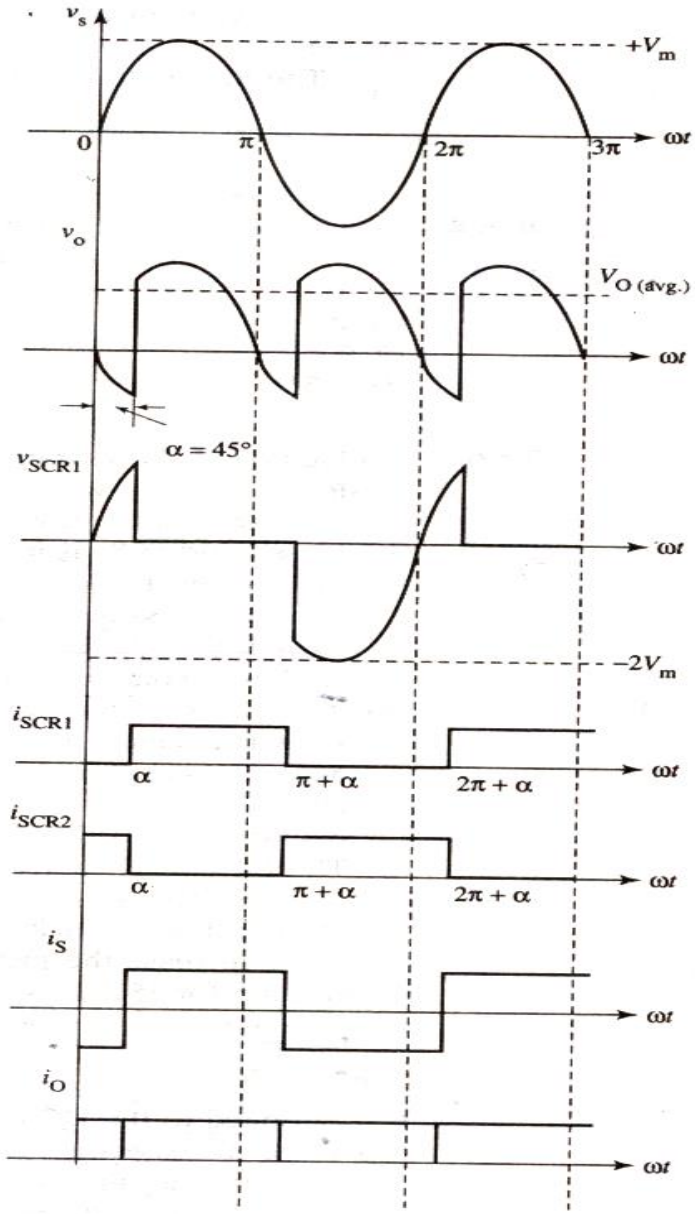

Voltage and current waveforms for α=90°

- **Average DC voltage is zero, so there is no transfer of power from AC source to DC load.**
- **Each SCR remains in conduction for 180°**
- **As firing angle is increased from 0 to 90°, the power supplied to the DC load decreases, becoming zero at *α=90°***

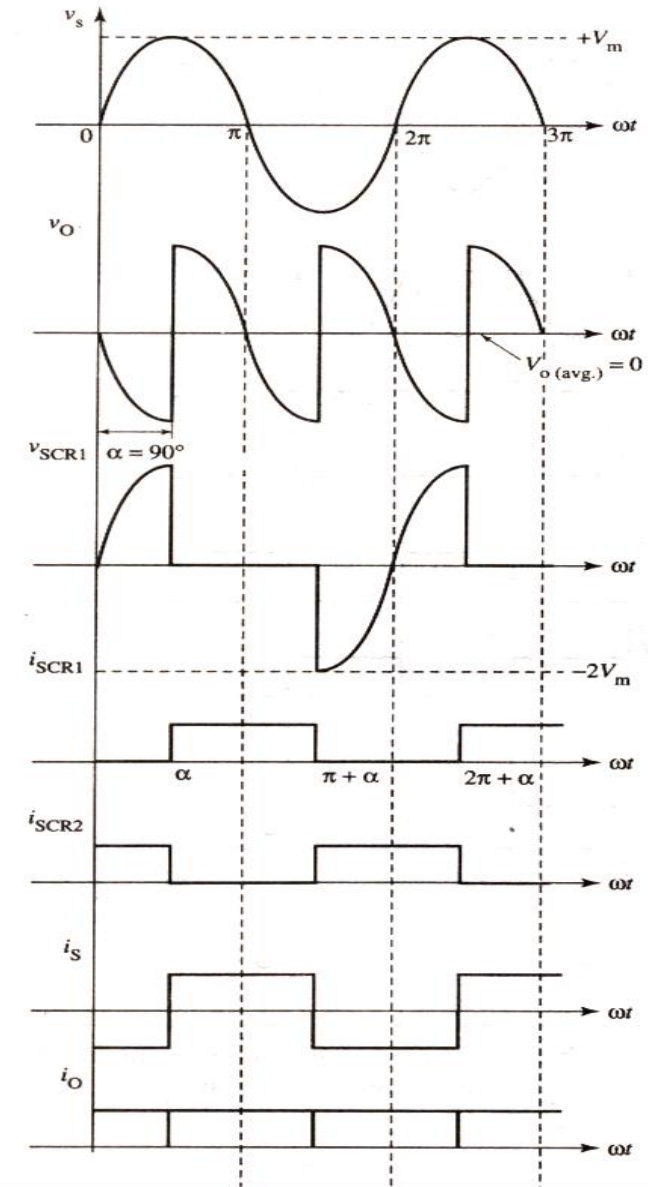

Voltage and current waveforms for α=135°

- **Average DC voltage is negative.**
- **Load current still flows in each SCR for 180° in its original direction.**
- **Load voltage has changed polarity.**
- **Power now flows from DC load to AC source .**
- **Circuit acts like an inverter.**

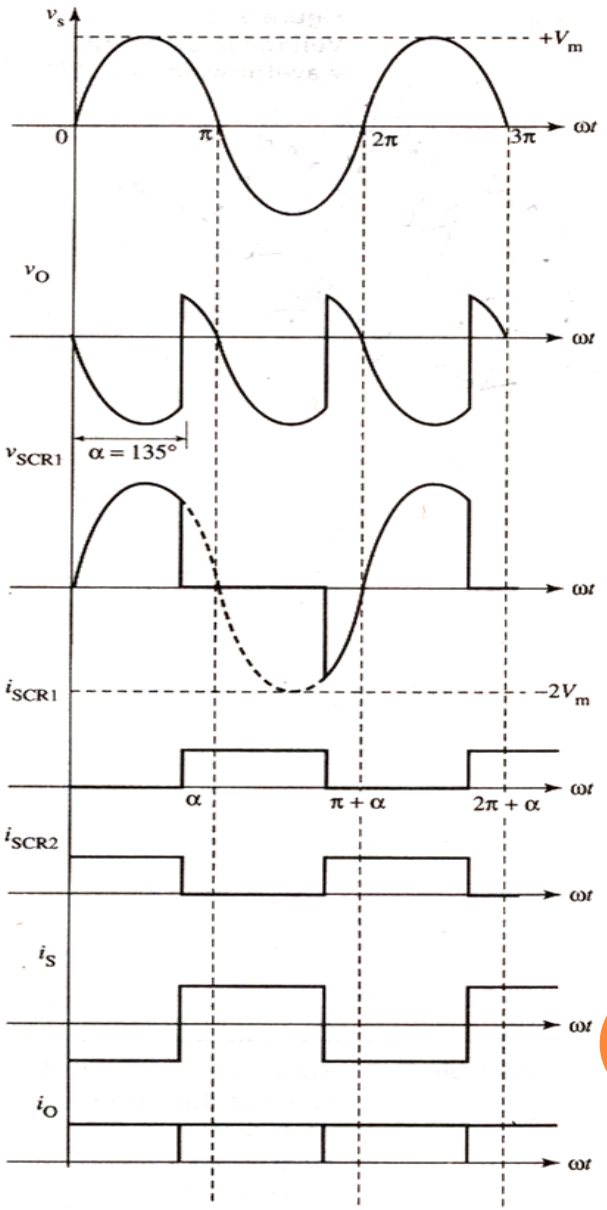

Voltage and current waveforms for α=180°

- **Average output DC voltage is at its maximum negative value.**
- **SCRs remain in conduction for 180°**

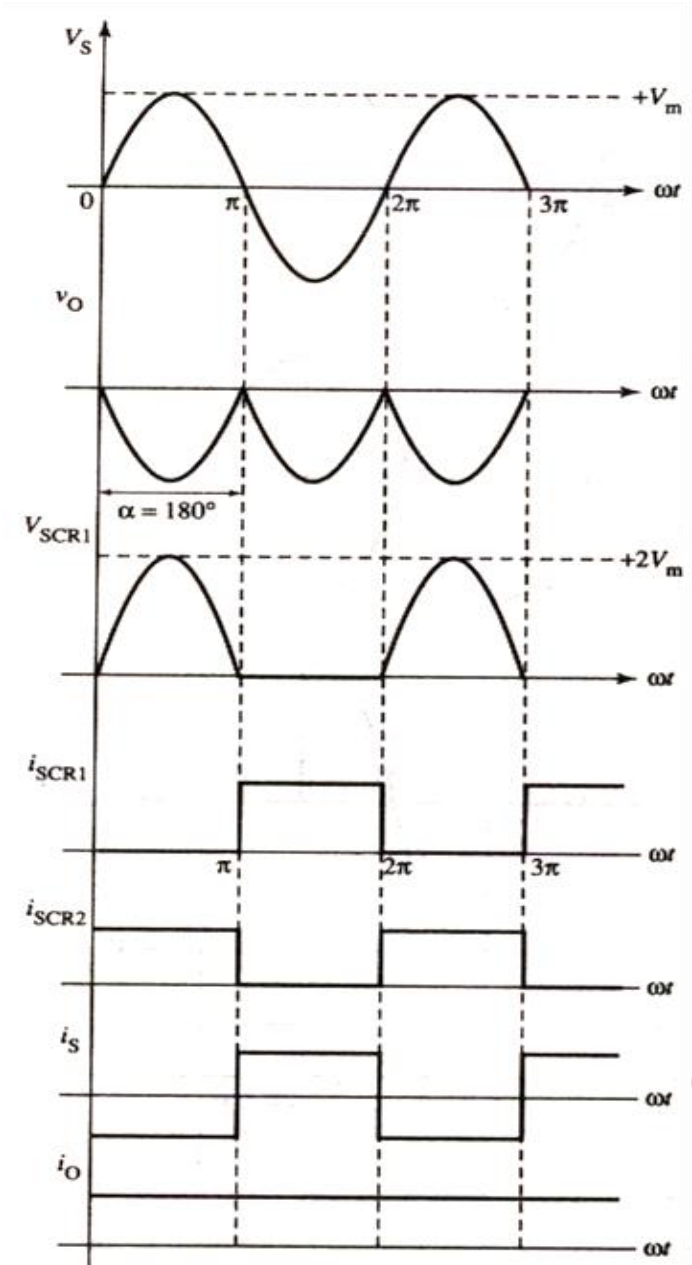

EXAMPLE 6.5

Show direction of power flow and operating mode (rectifying or inversion) of center-tap rectifier circuit with following firing angles:

A) $\alpha > 0°$

B) $\alpha < 90°$

C) $\alpha > 90°$

D) $\alpha < 180°$

Solution

- **For firing angle in the range $0° < \alpha < 90°$**

1. Average output voltage is positive.
2. Converter operates in the rectifying mode.
3. Power to the load is positive
4. Power flow is from AC source to the DC load.

- **For firing angle in the range $90° < \alpha < 180°$**

1. Average output voltage is negative
2. Converter operates in inversion mode
3. Power to the load is negative
4. Power flow is from DC load to AC source

Full-Wave Controlled Bridge Rectifier

With Resistive Load

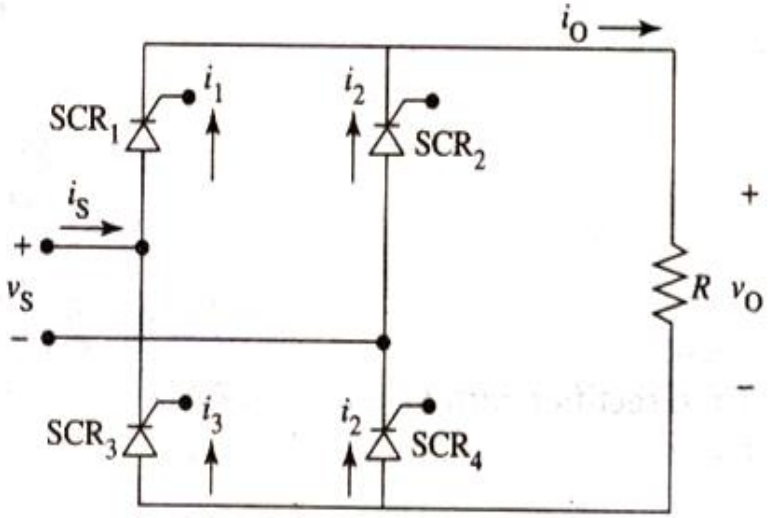

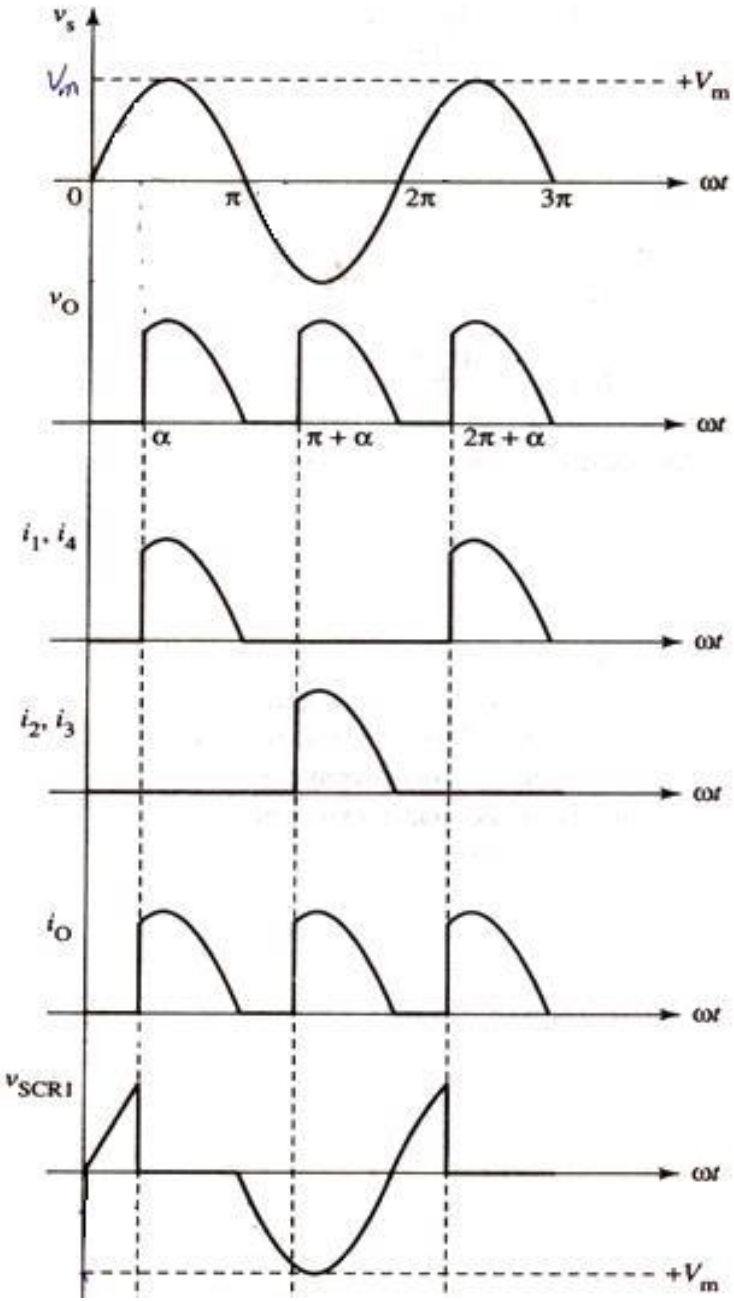

With an Inductive (RL) Load

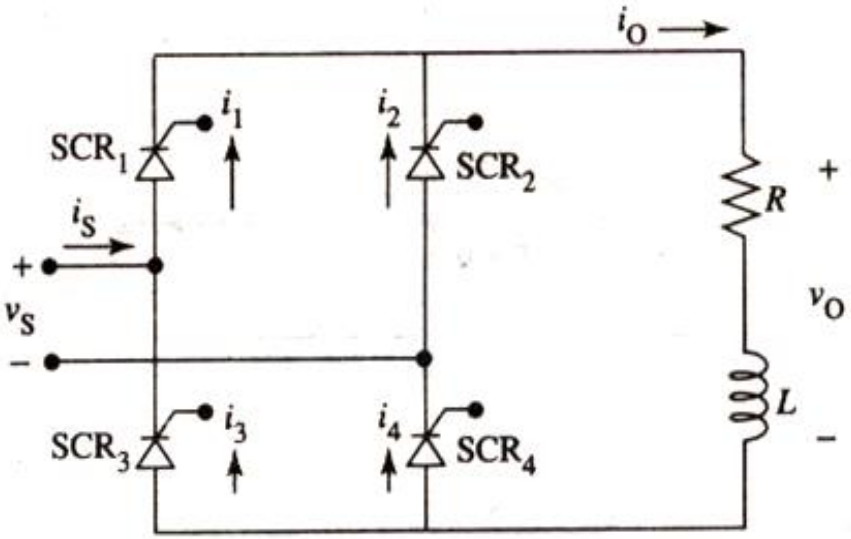

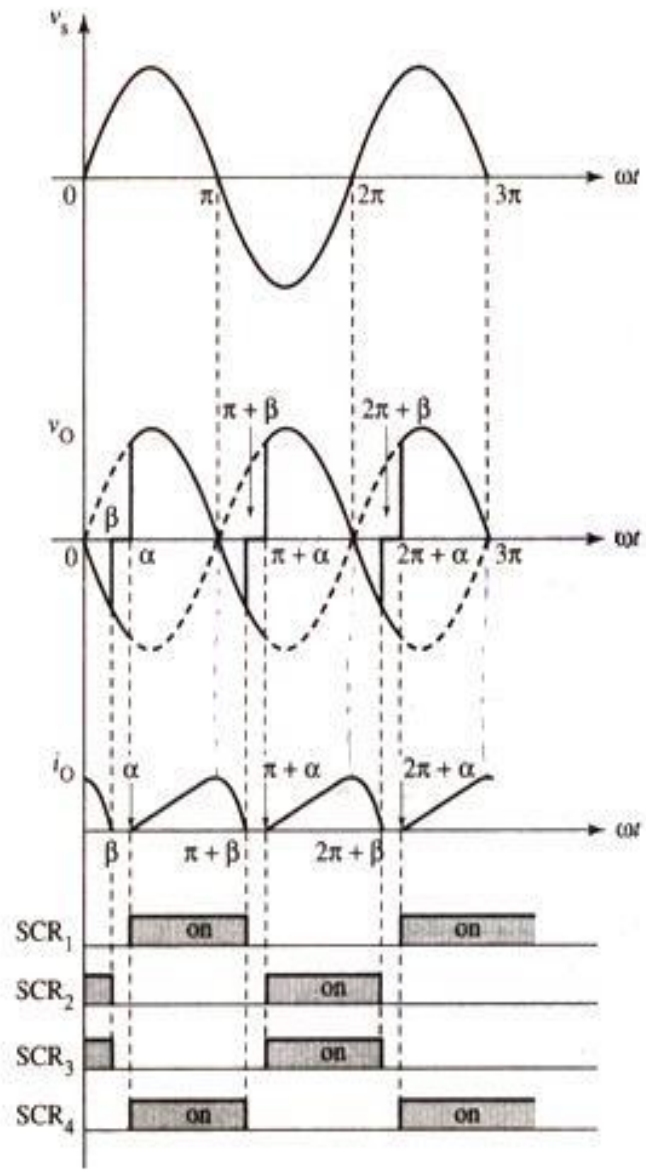

For L >>> R

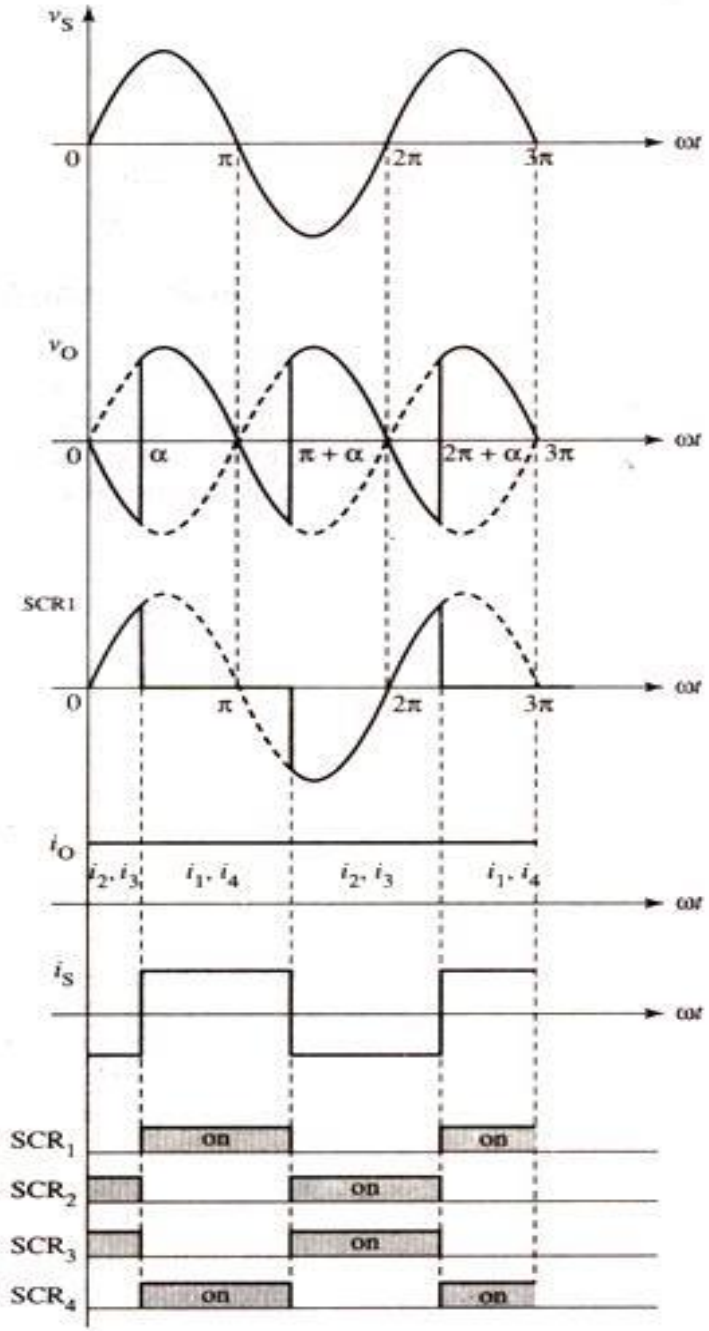
v_S
0
π
2π
3π
ωt
v_O
α
π + α
2π + α
SCR1
i_O
i_2, i_3
i_1, i_4
i_S
SCR_1
SCR_2
SCR_3
SCR_4
on

With RL load and freewheeling diode

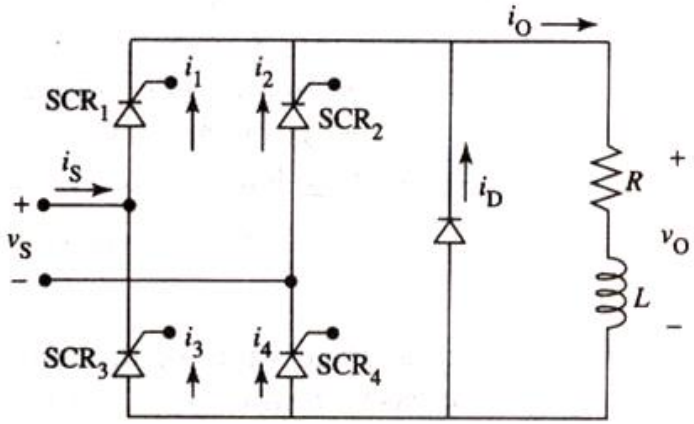

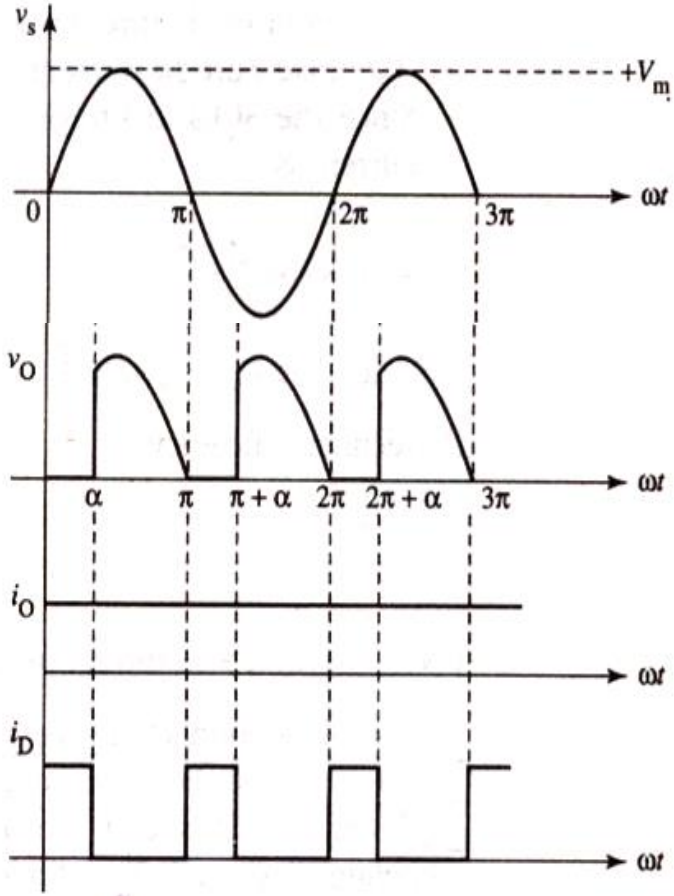

Half-Controlled OR Semicontrolled Bridge Rectifiers

- In fully-controlled rectifier, only rectification can be obtained by connecting a freewheeling diode across the output terminals of the rectifier.

- Another method of obtaining rectification in bridge rectifiers is replacing half of the SCRs with diodes. These circuits are called semicontrolled bridge rectifiers.

Full-wave semicontrolled bridge rectifier circuit

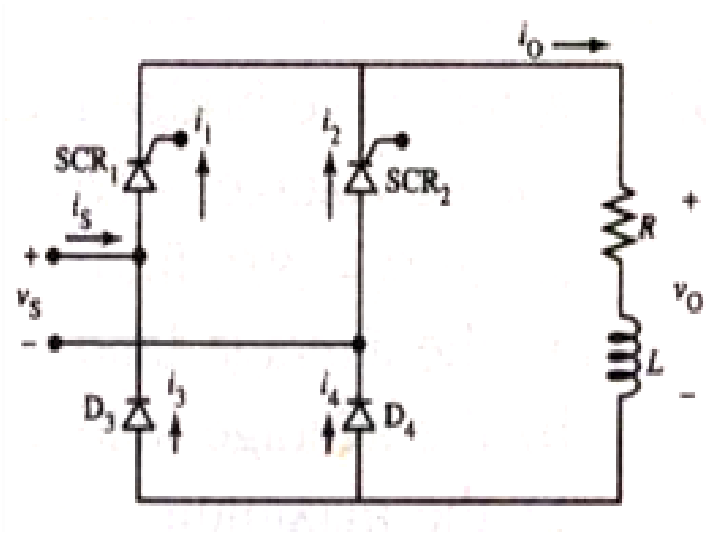

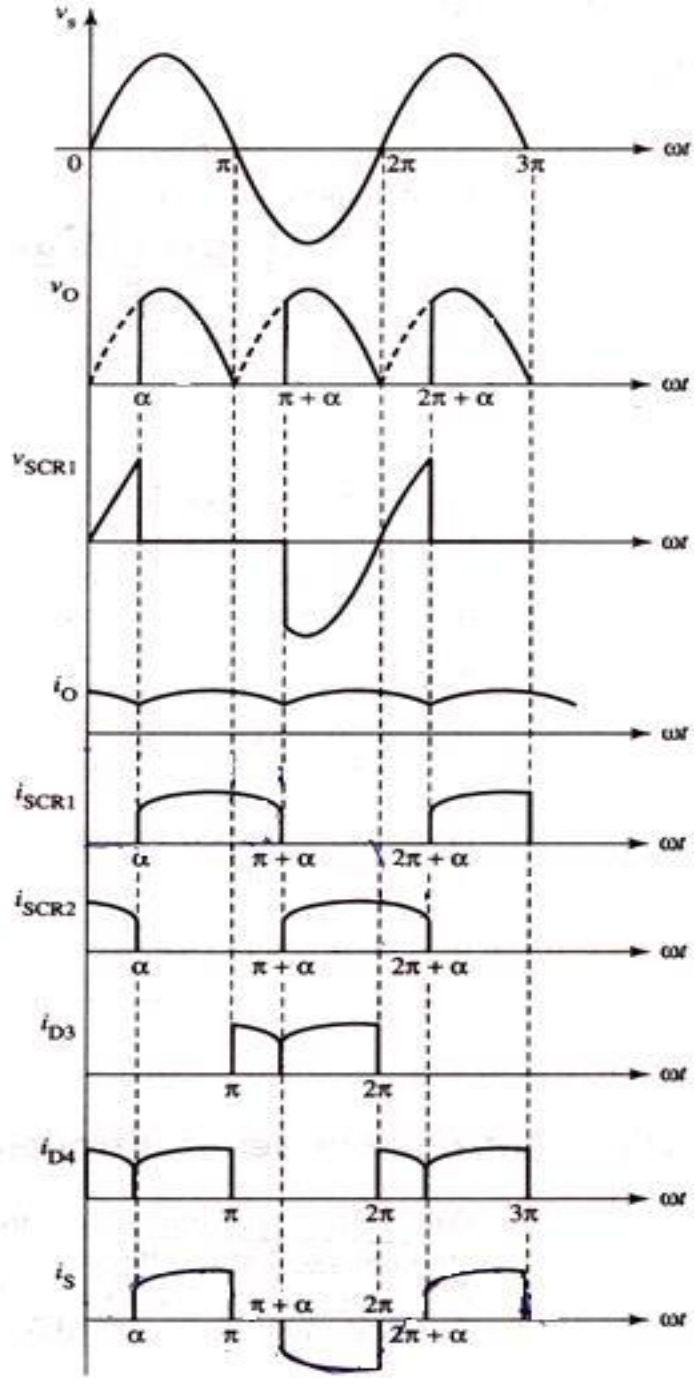

Semicontrolled bridge rectifier with FWD

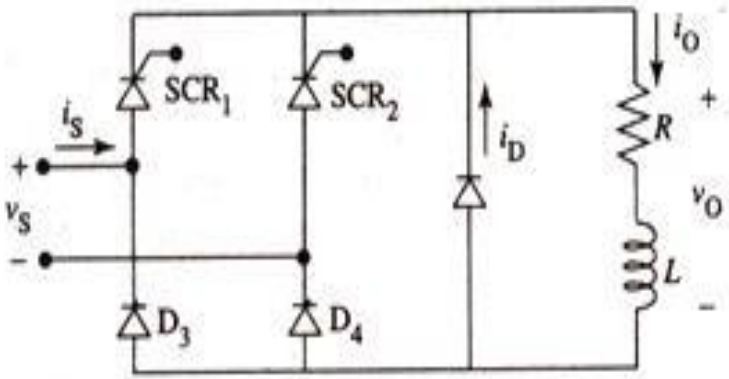

(a)